ASPEN
COMMERCIAL INTERIORS

FLEXI ROTATING DIVIDERS

1800 646 186 // sales@aspeninteriors.com.au // www.aspeninteriors.com.au

ASPEN
COMMERCIAL INTERIORS

The adaptable FLEXI is an essential tool in reducing noise in a work environment. Simply open or close these adjustable mobile blinds to find the right balance for your workplace.

ASPEN
COMMERCIAL INTERIORS

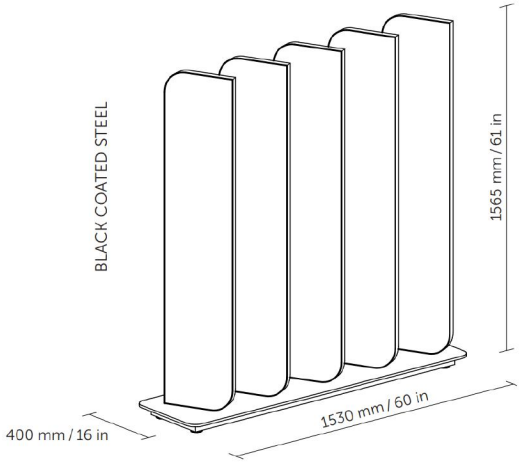

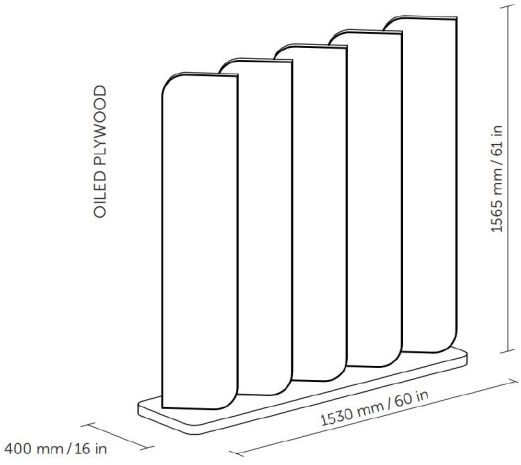

TECHNICAL DETAILS

basic dimensions	1530 x 400 x 1565 mm /60 x 16 x 61 in
blinds	covered with sound-absorbing material
finish	decorative fabric (refer to swatches)
feet	black coated steel/ oiled plywood

RAL 9003 (white) RAL 9004 (black) RAL 7004 (grey)

1800 646 186 // sales@aspeninteriors.com.au // www.aspeninteriors.com.au